6’ Full Table Throw

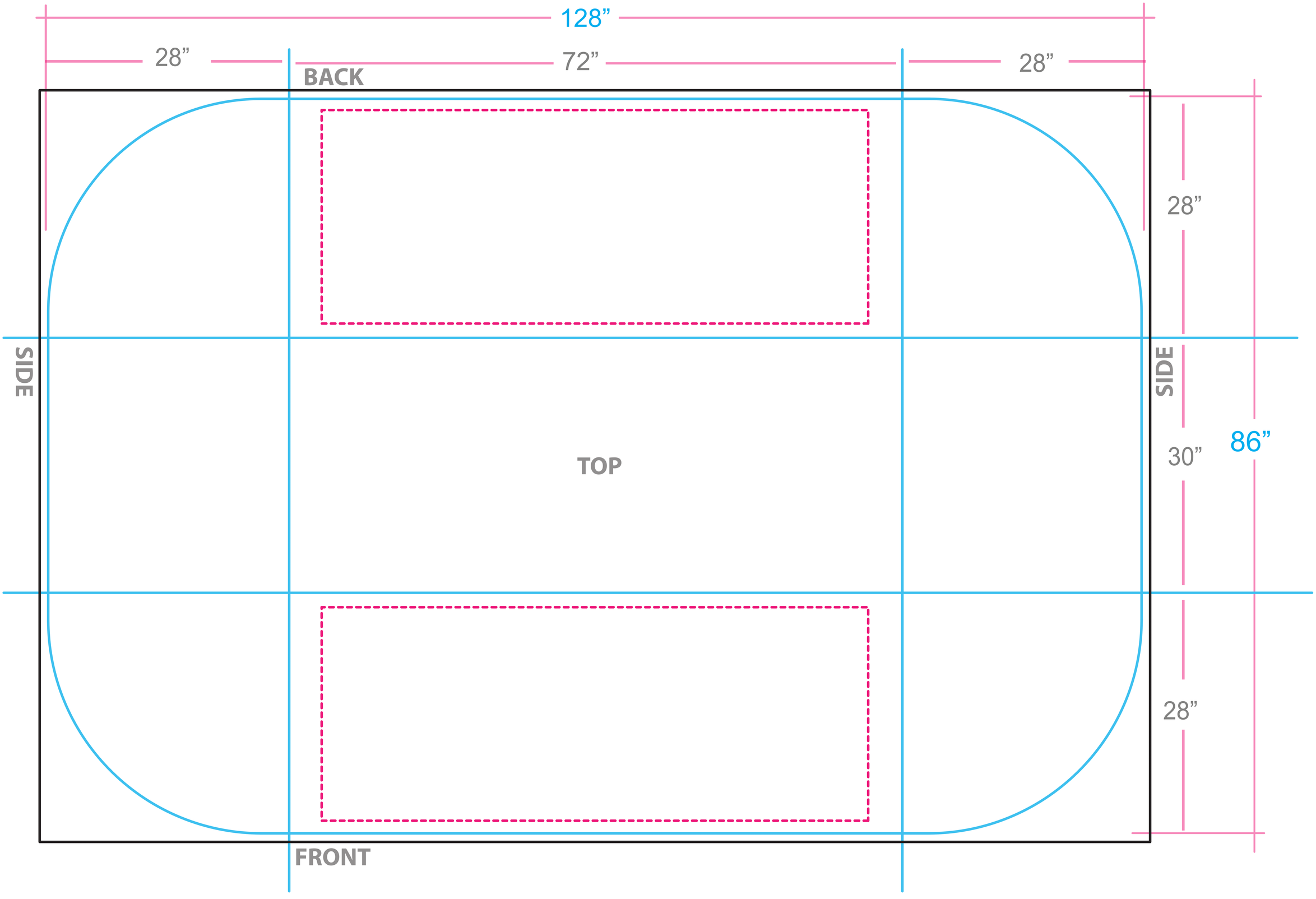

Print Size: 130”w x 88”h

Final Size: 128”w x 86”h

Logo Live Area: 64”w x 25”h (front and back)

8’ Full Table Throw

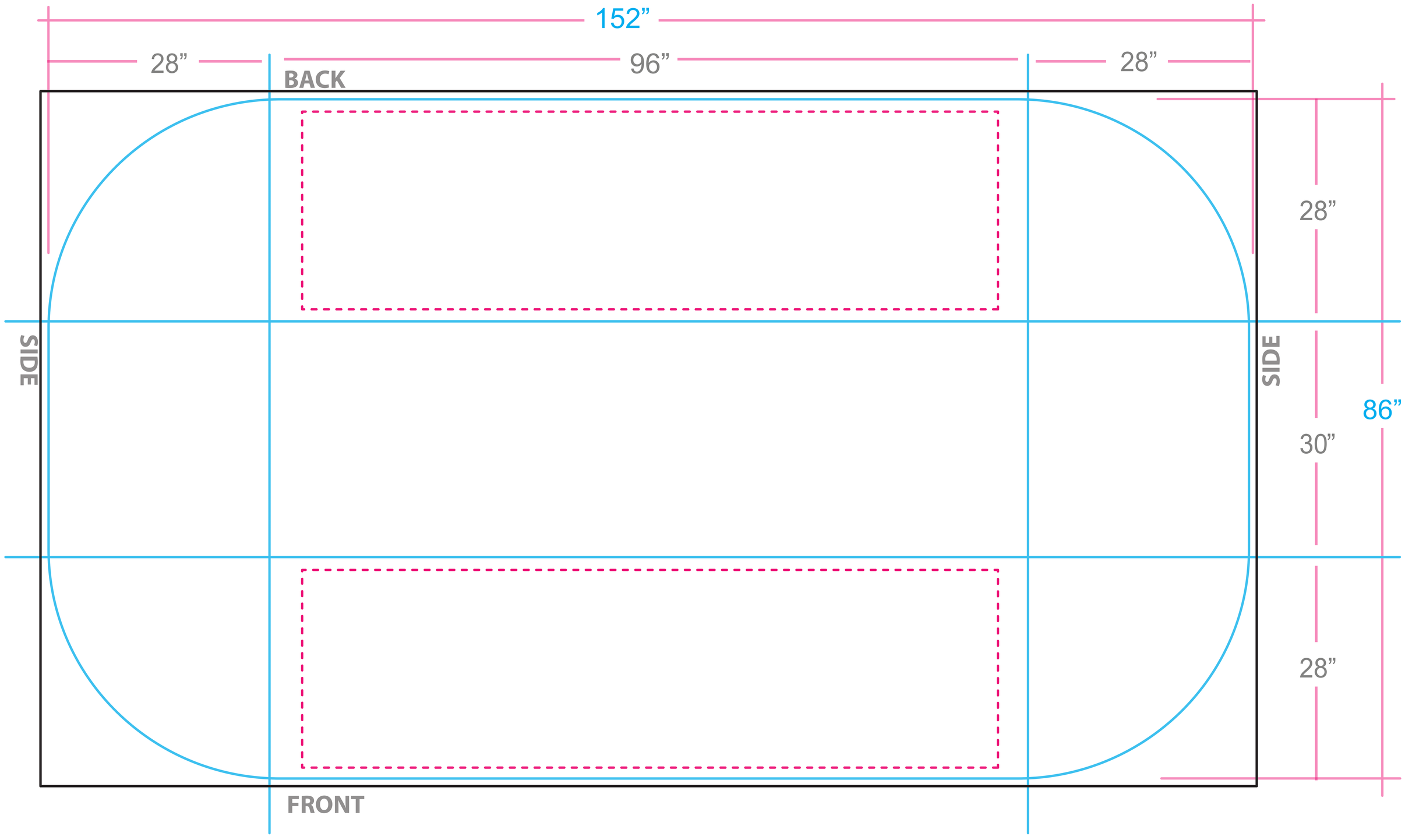

Print Size: 154”w x 88”h
Final Size: 152”w x 86”h
Logo Live Area: 88”w x 25”h (front and back)

6 - 8’ Convertible Full Dye Sub Table Throw

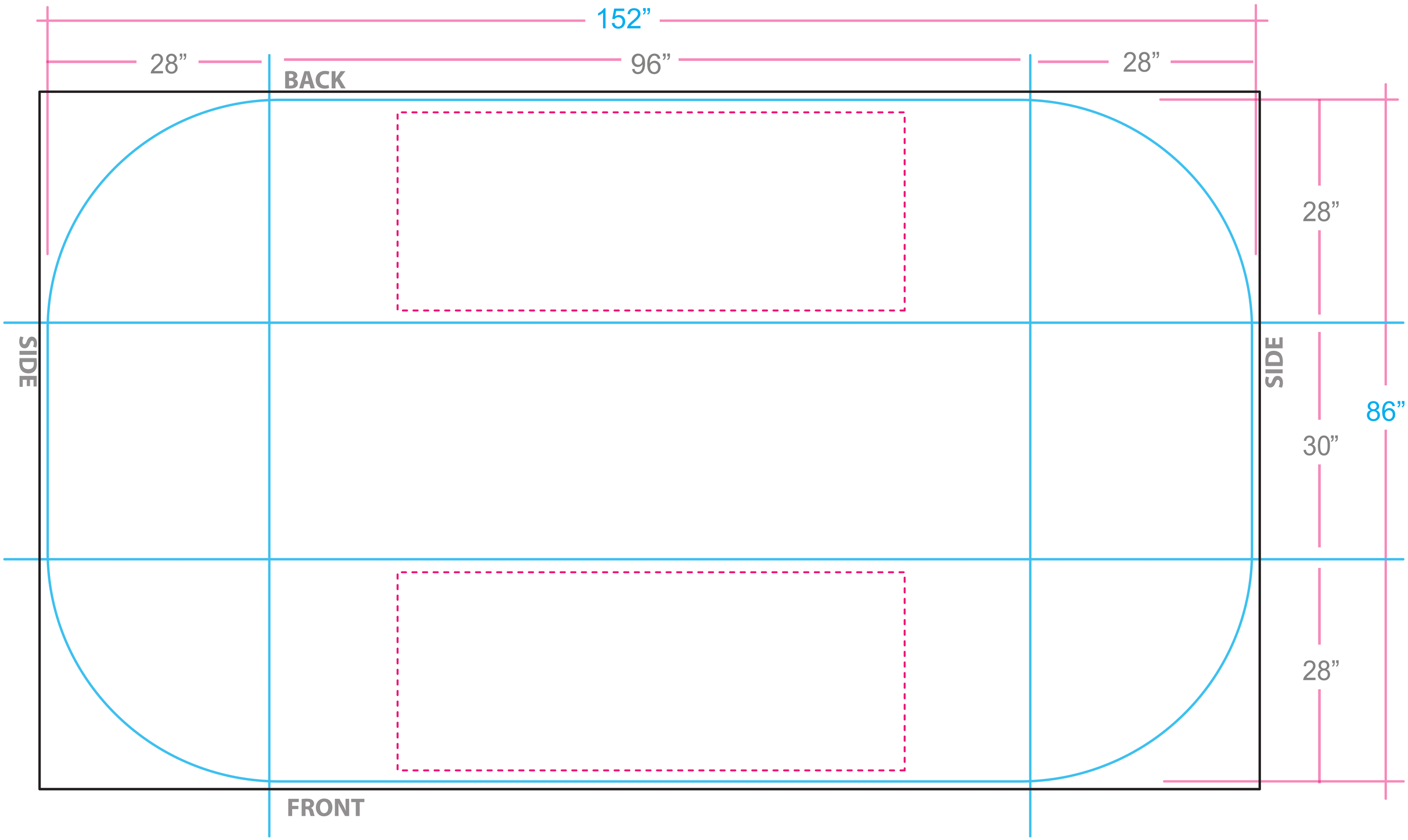

Print Size: 154”w x 88”h
Final Size: 152”w x 86”h
Logo Live Area: 64”w x 25”h (front and back)

6’-8’ Convertable
Dye Sub Front Table Throw

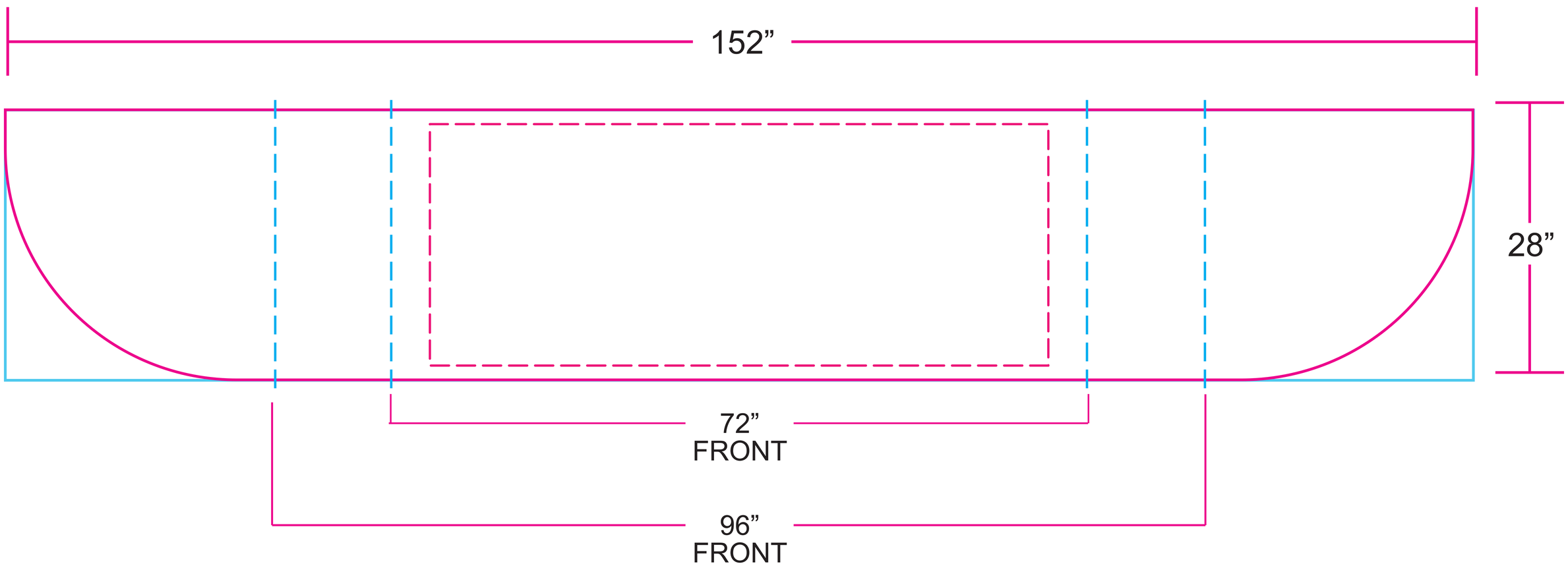

KEEP ALL CRUCIAL ARTWORK ELEMENTS SUCH AS TEXT/LOGOS/IMAGES WITHIN LIVE AREA OF 64 x 25

——— **FULL FRONT PIECE: 152 X 28**

--------- **TABLE FRONT: 72-96 X 28**

--------- FRONT LIVE AREA: 64 x 25