6’ V-Throw Full Dyesub

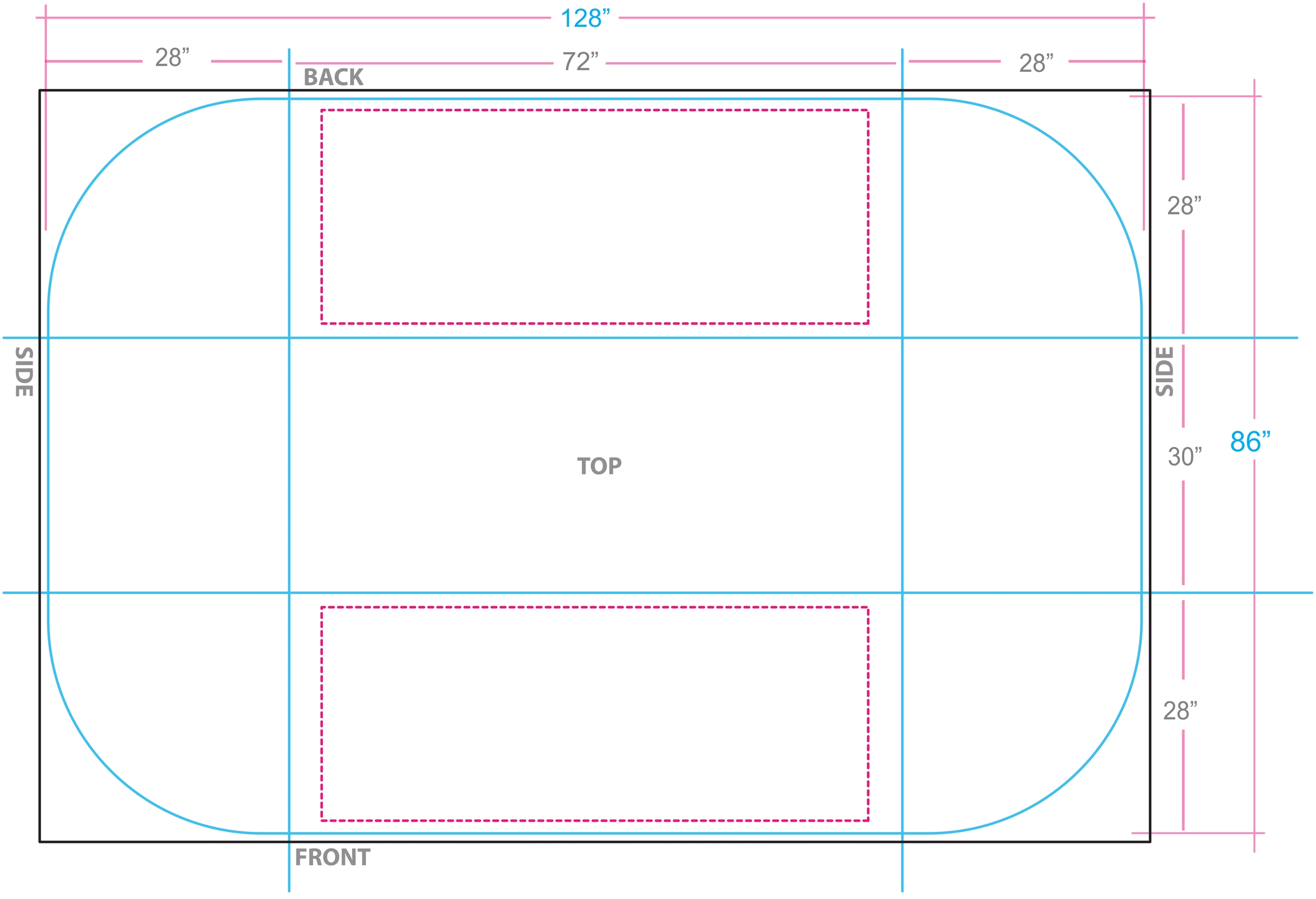

Print Size: 130”w x 88”h

Final Size: 128”w x 86”h

Logo Live Area: 64”w x 25”h (front and back)

8’ V-Throw Full Dyesub

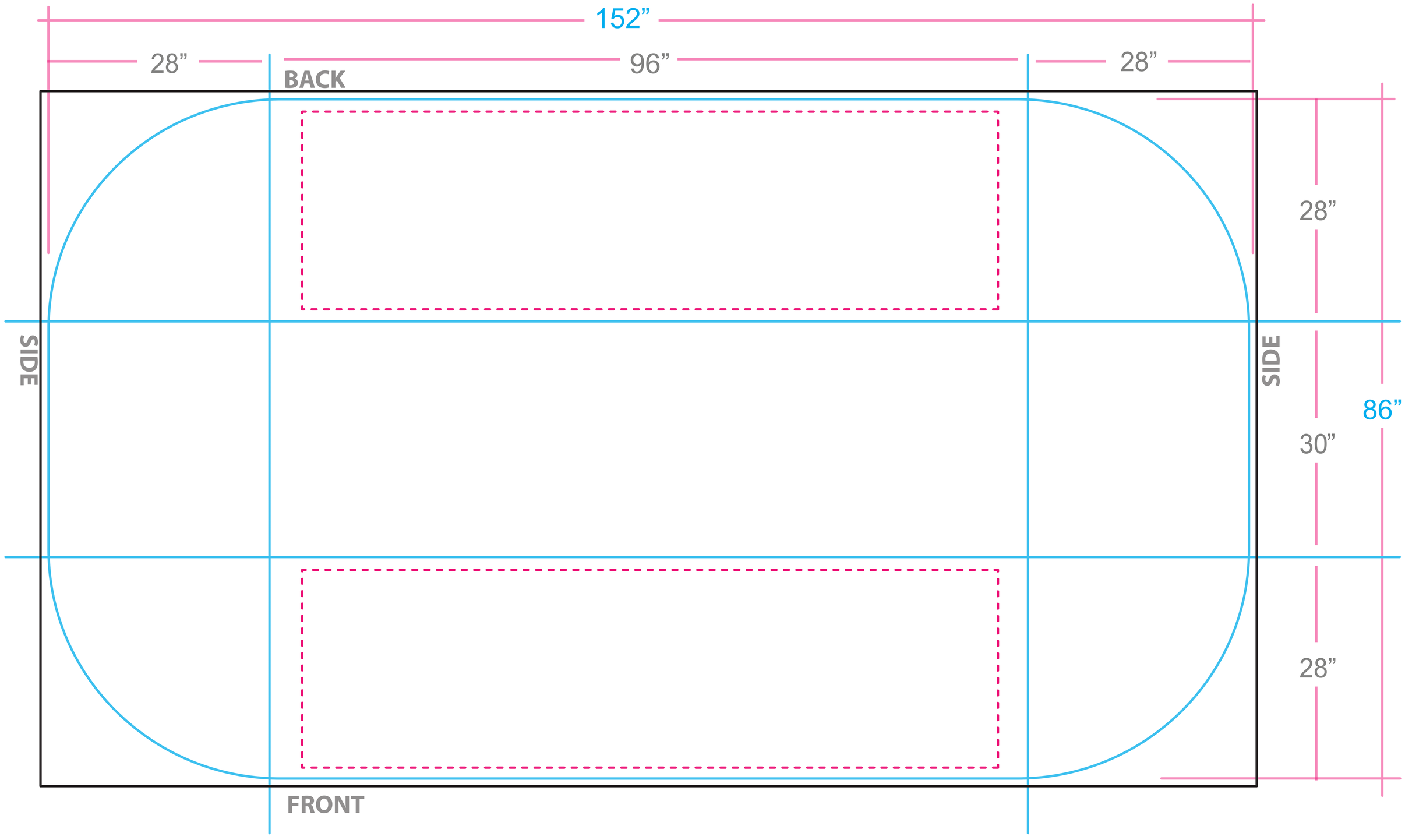

Print Size: 154”w x 88”h
Final Size: 152”w x 86”h
Logo Live Area: 88”w x 25”h (front and back)